GWL/ Power Group Technology Solutions - Stay Powered for the Future

GWL/Power Technical Document

The industrial RT-BMS

Summary of the technical FAQ

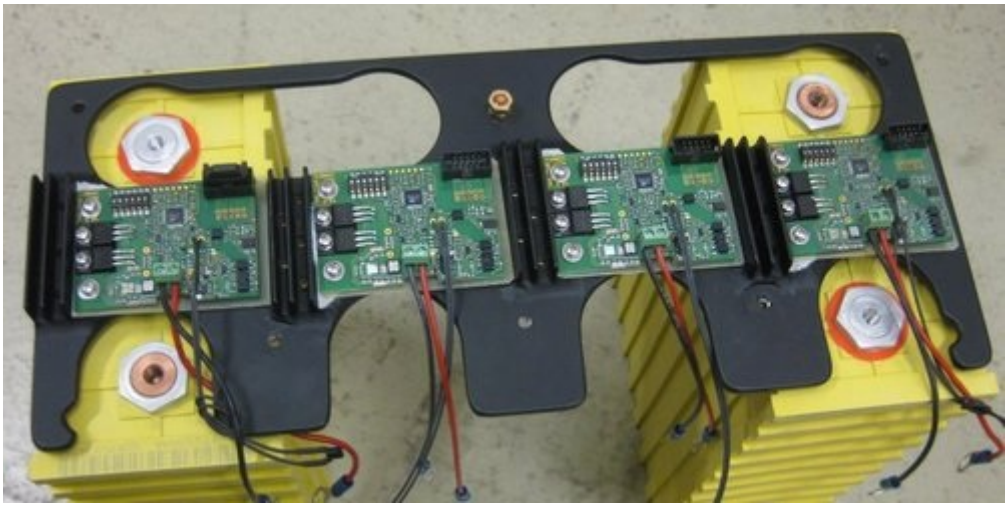

December 2012

http://www.ev-power.eu

RT-BMS CBU version 4.0 – The new generation:

Starting with January 2011, we are offering **the latest CBU modules version 4.0 only**. We do not offer any new pieces of the previous versions (version 2.0 with Kerafoil, version 3.0 without Kerafoil).

This means *it is not possible to extend or upgrade your existing BMS systems* that are using the previous versions of the modules. The new modules version 4.0 are not compatible with the previous versions 2.0 and 3.0.

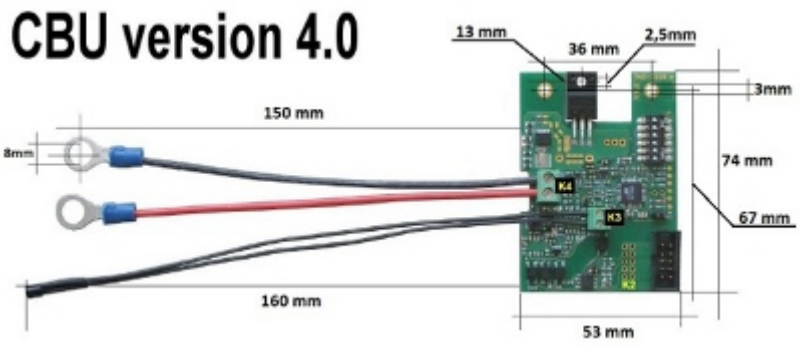

Please note that we supply two versions of the control units RT-BMS system: For up to **64** cells and for a maximum number of **192** cells. **Only the version for 192 cells** contains a complete list of functions including CAN communication.

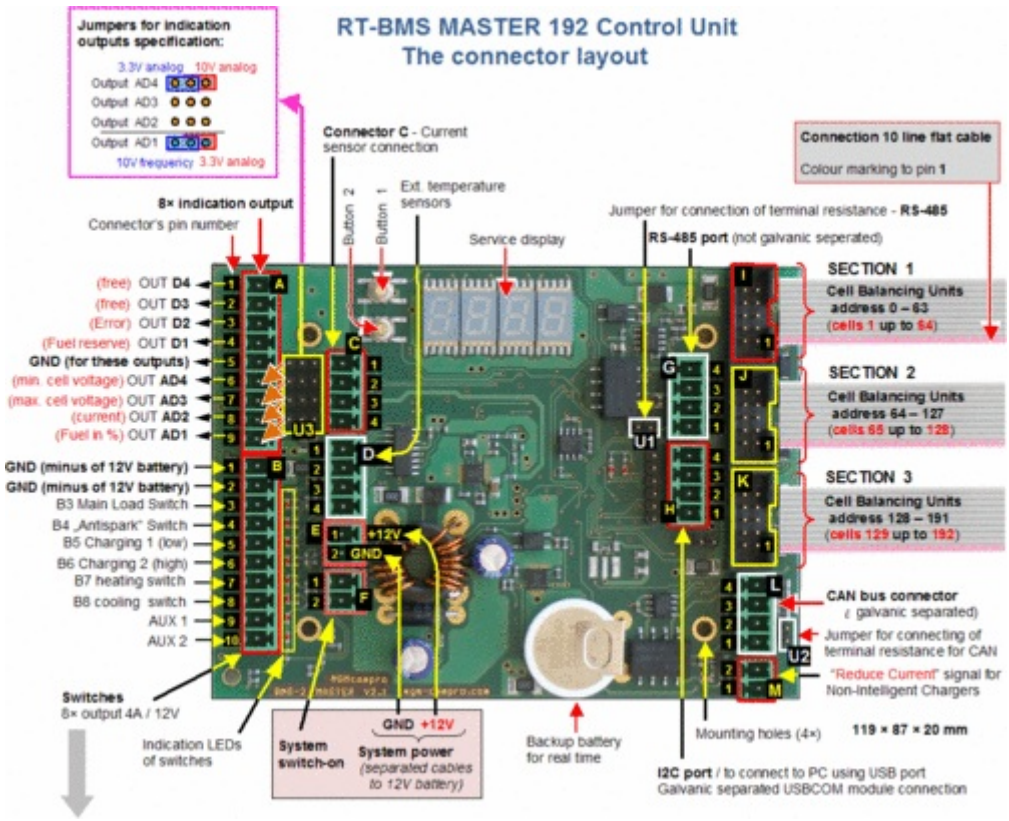

RT-BMS Control Unit 64 DOES NOT contain following options:
connector D - external temp. sensors, connector G - RS-232, connector L - CAN bus, connector M - reduce current. There is only one section for 1-64 cells (connector I).
If you wish to get these options, you need to buy the **CU192** cell version.

The proper installation the key to success for the BMS function.

Please note, that one „missing CBU“ can lead to a damage of the whole battery pack, if operated for a long time without inspection.

The frequent installation faults:

Improper cabling of the 10 pin flat cable – the result:
some of the CBUs are not find during the boot-up of the whole system.
Solution: check the flat cable and/or replace the cable if needed

Humidity, water drops, and wetness on the CBU boards – the result:
oxidation of the CBUs, malfunction of the CBUs.
Solution: the CBUs must be protected against moisture and water.
Please change the installation to allow such a protection.

Interference of electric noises on the operation of the CBUs – the result:
some of the CBUs may loose the communication with the Master unit.
Solution: It may be necessary to use a shielded cable, especially for longer parts of the cabling.

Improper cooling of the CBUs – see this proper suggestion:

In order to assure of the proper balancing function of the CBU units, it is necessary to mount the CBU modules onto quality coolers. The high quality cooling allows to release the extra energy that would otherwise cause the overcharging of the cells.

The RED color LED on the CBU units indicates that overheating is occurring. In such a case it is recommended either to increase the effectiveness of the cooling or to reduce the charging currents.

We strongly recommend you keep checking the operation of the RT-BMS system periodically.

Proper installation CBU module:

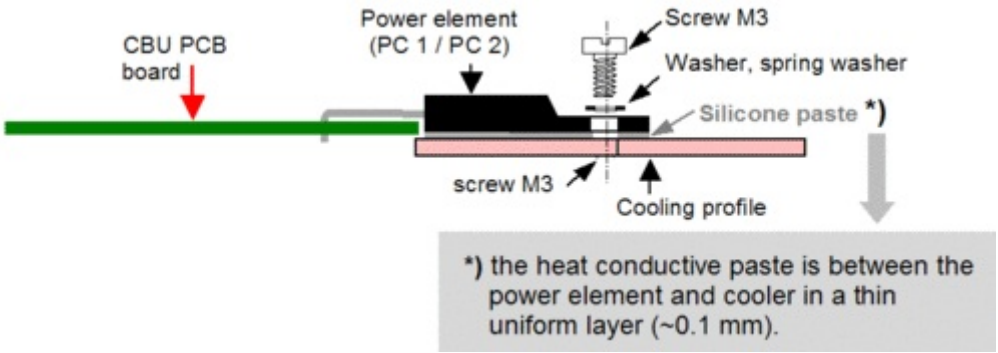

RT-BMS Technical FAQ:

Question: *Balancing of the cells at the initial charge. I have assembled a new battery pack. I have a RT-BMS CBU that balances with 5A of heat discharge on each cell. I keep charging my cells for many hours already and some cells are already full and some cells are not charged yet. What is the problem?*

Answer: The cells must be charged individually to full voltage level (typically 4.0V) before assembling the battery pack. This way the cells will be fully charged and balanced before the first use of the battery pack and there will be no need to balance the cells using the BMS with balancing. (Additionally to the first installation, we recommend to checking the cells of the battery pack from time to time and making the full balancing of all the cells, by means of the individual charging.)

Note: Concerning the balancing using the heat dissipation (over the BMS modules): keep in mind that it takes a lot of time to balance the cells this way. If you have 300Ah cells with +/- 20% misbalance, you need to balance up to 40 Ah of capacity. With 2 A balancing current, you may need 20 hours to finish the balancing. Even more, you waste a lot of energy that will be discharged at the cells that are already fully balanced. That is why we do not recommend to balance the cells this way.

Question: *I have the RT-BMS installed on 16 cells. It seems to work OK. Only the balancing does not seem to be working properly. The voltage on some of the cells goes up to 4.00V and the CBU does not seem to control this. The BMS will switch off the charger for some time, but the cells are not fully charged.*

Answer: The balancing current of the CBU is maximal 5A for the standard version and maximal 10A for the high-power version. This means following: if the charging current is higher than 5A (or higher than 10A) the CBU cannot balance the cells and the voltage will increase. When the voltage goes high, the BMS Master unit will first signal to reduce the current (BMS pin B6 – High/LOW). If the voltage of the cells continues to grow, it will signal the full stop of charging (BMS pin B5 – Charging MAIN). The charging current needs to be reduced bellow the balancing currents of the CBUs to allow for the balancing of the cells without voltage increase.

Note: Keep in mind that the long time balancing is not good for the operation of the cells. Check details: http://gwl-power.tumblr.com/post/16313143538/gwl-tech-report-long-time-balancing-a-slow-way The balancing current of the CBUs (5A or 10A) is reached only when proper cooling of the CBUs is provided. If the cooling of the CBUs is poor, the balancing currents will be reduced automatically to avoid over heating.

Tip: We always suggest to balance the cells individually before assembling the pack.

Question: *What is the RT-BMS consumption during stand-by and the operation?*

Answer: The total energy consumption of the RT-BMS Master unit (from the 12V board battery) in the stand-by mode is about 5mA. During the operation it is 100 mA and more for each CBU module (about 5mA for each CBU module). The consumption of a setup with 32 cells may have a consumption of 100mA + (32 x 5mA) = 260 mA.

Tip: If your BMS consumption is significantly higher, you should check your setup, as there may be some problem. The energy consumption of the CBU modules is taken from the cells themselves. It is about 0.1 mA in a standby mode and 30 mA in operation mode.

Warning: Please keep in mind that especially with small capacity cells, the cells may be depleted by the CBU modules if left without charging for many weeks. If you have a system that will be left uncharged for long periods of time, we strongly suggest to disconnect the CBU cells (or any other electronics) from the cells.

Question: *RT-BMS connection to chargers - the wiring of the pins on the connector B.*

Answer: There are two outputs for controlling chargers:

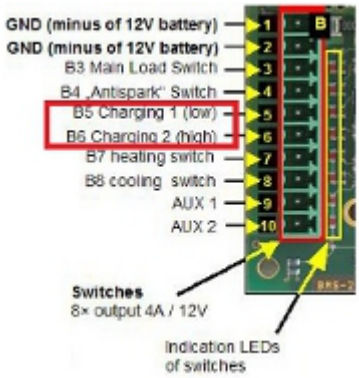

Powerful charger 2 connected
(output PIN6)

If is connected a powerful high-current charger,
MUST be connected the low-power charger
to output PIN5 !!!
If it is connected only one charger,
this must be connected to PIN5

Wiring for QQE Chargers:
http://auto88.cz/_pdf/RT-BMS-SignalDataLines.pdf

Wiring for TC Chargers:
http://gwl-power.tumblr.com/post/21078742294/rt-bms-connection-to-the-tc-chargers-the-diagram

Note: There is not any standard of the pins used at the charges to communicate with the RT-BMS.

Question: *What type is the connector used at the charger to connect to RT-BMS?*

Answer: For QQE chargers usually used the Phoenix or WAGO type connector.
(Wago 231-104-031-000)
For TC chargers is used the WEIPU type connector.
(WEIPU SP1310/P7)

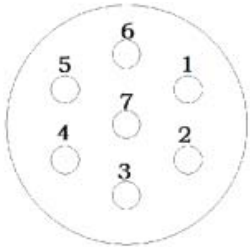

Note: These connecters should be supplied with your charger.

Question: *CAN Bus equipment operation - I have a RT-BMS 192 with CAN option. I have a battery charger with CAN connector, I also have a dash board (display unit) with CAN option. How can I make these components work together over the CAN bus?*

Answer: In most cases you need a master CAN bus unit to make the equipment work together. Most of the CAN bus equipment is only either sending data (Read Only mode) or receiving commands (Write Only mode). This equipment has no additional logic to make decisions of operation for other equipment or to control it. The logic of the operation must be set by the master CAN bus unit.

Example: BMS system is sending data (about the status of the battery pack). A ventilator with CAN input is only receiving data (turn on/off and the rotation speed). The BMS itself cannot manage the ventilator. There must be the CAN BUS master unit to process the data from the BMS over CAN and to decide if the temperature is over the limit and when the ventilator is to begin the operation. Then the CAN bus master unit i will send data to the ventilator over the CAN bus.

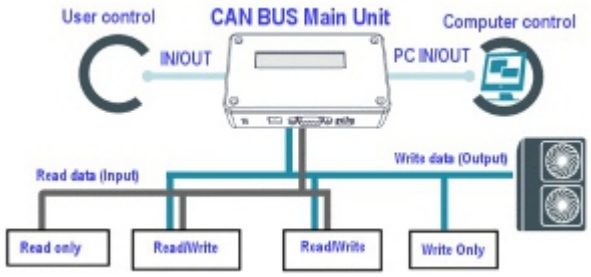

RT-BMS CAN Bus definition:
http://gwl-power.tumblr.com/post/3469119680/rt-bms-can-bus-definition-following-datagrams-are

---

Question: *RT-BMS power-on and settings after STAND-BY. At the general power on (+12V) all the contactors are connected for short time. Is it a normal operation?*

Answer: Yes, this is a safety checkup of all contactors and signal lights. This is to confirm that all of these outputs are working properly.

Tip: This logic is the same in your car: when you turn on the starting key in your car, all important signal lights on the dash board will light briefly to confirm that the signalization is OK (like airbags, EPS, motor oil and other lights)

Question: *After the power-on, the unit performs a sort of scan of the system. The numbers of 01.00 to 01.63 (02.00 to 02.63, and 03.00 to 03.63) was displayed. This behavior is also present if we set a number of 4 cells on the system. Is it a normal behavior?*

Answer: Yes, this is normal. After power-on the Master unit scans all possible combination (3x 64) to locate any CBU on the data line bus. This is for safety reason to confirm that the communication with all CBU is regular. Also it can help to locate any CBU that would be miss-addressed. In regular operation the RT-BMS Master should be powered all the time and only to be turned-on/off by means of the stand-by mode.

Tip: This logic is like your TV with DVB-T tuner: you plug the TV on the socket for the first time and it will scan all possible channels. Following that you keep the TV always ON, and you only use the STAND-BY mode (but it is powered 365 days/24hrs). Of cause if you disconnect the TV with tuner from the main power, and re-connect, it will scan all the channels again.

Question: *After the power-on, the system always activates the load contactors (PO1) and the charging contactors (PO3 and PO4). Why is this so?*

Answer: This is a correct function. The contactors are turned on by the setting values of the RT-BMS. When you power-on the BMS-System and the cells are at regular voltage level, the RT-BMS will check the voltage levels and if the voltage levels are OK, it will turn on the contactors. When the cells are at 3.3V, you can either discharge them or charge them. That is why all contactors are ON.

Question: *RT-BMS recommended setting of parameters for LiFePO4 - general use.*
Could you suggest us a good setting for our LiFePO4 cells?

Answer: The exact parameters in the controller must match the specific type of cell according to the manufacturer's specifications. Each user is responsible for making the correct setting of the RT-BMS.

Several parameters that are commonly used for LiFePo4 technology can be used universally.

P1 Switching-off voltage, P2 Low voltage, P3 Balancing voltage, P4 Charging voltage

We recommend to set following voltage level values for the LiFePo4 cells:

P1:2.5V – P2:2.7V – P3:3.6V – P4:3.8V (Full DEEP cycle 100%)
P1:2.6V – P2:2.8V – P3:3.6V – P4:3.8V (Full SAFE cycle 90%)
P1:2.8V – P2:2.9V – P3:3.6V – P4:3.7V (Recommended cycle 80%)

Question: *After the power-on, the Control Unit reads each cell and after 10 seconds the BMS stop and give a error F005, 006. What is the problem?*

Answer: This error means that, the CBU on position 005, has problem with temperature sensor.
Description of the information which can appear on the display:

Control unit basic displayed messages:

Cx.xx	cell voltage with the highest value
dx.xx	cell voltage with the lowest value
X.xxx	difference between highest and lowest cell voltage OR total pack Voltage

Sample:

C3.14	means cell with highest voltage has 3,14V
d3.02	means cell with lowest voltage has 3,02V
0.127	means difference is 0,127V
or	
13.15	means total pack Voltage (depends on the software version of the control unit)

Control unit next displayed messages:

FXXX	measuring / balancing unit address, which signalize some problem, and follow
XXXX	error number
AXXX	address of the balancing unit is not followed by an error because there is a problem with the connection.

Error messages:

BMS error indicates which balancing/measuring unit is faulty (its address, e.g. **F041** = cell number 42),
The list of error of balancing units is as follows:

0000 :	communication error
0001 :	damaged EEPROM with calibration data
0002 :	damaged balancing FET – balancing current not flows and cell is not balancing
0003 :	damaged balancing FET – balancing current flows all the time and discharge cell !!!
0004 :	damaged internal DC/DC converter
0005 :	balancer overheating > 130 °C
0006 :	damaged temperature sensor
0007 :	damaged battery temperature sensor
0255 :	BMS without set parameters (from factory)

Note: This is the default status of the new BMS - some parameters the user must first set up according to their specific situation with a PC, by the program "*Controller 2*".

Question: *The monitoring window of the Controller2 always display 0% of capacity. Why is this so?*

Answer: This is the standard behavior when is BMS a new, or after reset button. The BMS processor does not know the actual capacity of the battery that is currently connected. The new battery cells needs to be charged at full capacity when running BMS, (including the current probe properly connected). Or if the batteries have been recharged separately - outside BMS connected, in this case, the capacity indicator must be calibrated.

Calibration procedure:

1. Charge the battery at full
2. Set the value of the parameters P4 to less value than is the voltage at the lowest cell.
3. after saving the settings, it turns SoC indicator to 100 percent.(SoC - State of Charge)
4. Then it is necessary to return the settings to the recommended values

Information about RT-BMS setting parameters is available on our web pages:
http://www.ev-power.eu/docs/GWL-Power-RT-BMS-parametersEN-D.pdf

---

Question: *RT-BMS - principle of balancing. The balancing process start at the voltage defined with the P3 parameter if the P26 parameter is set to "From nominal voltage". Otherwise it is not balanced. Is it correct?*

Answer: No, it is not entirely exact, the system can also balance until it reaches the charge voltage, which is defined in P4. Please see specification of balancing method here:
http://www.ev-power.eu/docs/GWL-Power-RT-BMS-parametersEN-D.pdf

---

Question: *The balancing method seems to be only an ON-OFF of the Fets on the CBUs. There isn't any PWM regulation or closed loop regulation for the mosfet driving. Is it correct?*

Answer: Fet transistor is operated smoothly to maximum 5 A (or up to 10A at Hi-Power version) CBU module has its own protection against overheating, which is indicated by a red LED.

Note: It is always necessary to ensure proper cooling of the FET transistor.

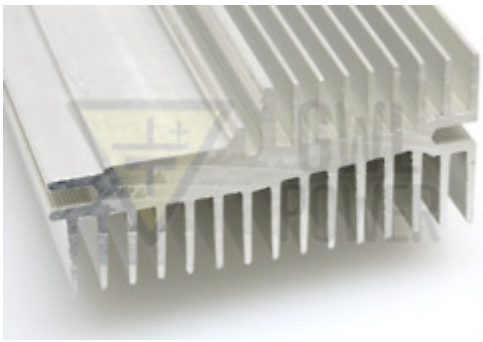

Question: *If the cells are unbalanced by a voltage above 50mV, the relative CBU start to drive the FET. This is the real threshold for the balancing or there are other parameters considered by the BMS/CBU for the balancing process?*

Answer: In principle yes, but this scheme "50mV" is valid for two of the balancing modes only:
- Balancing modes "CONTINUOUS" and "DELAYED"

Starting point for balancing determines the reference voltage. This voltage is determined by the condition of the slowest Cell in the battery pack during charging. In other words, if the cells are aligned by voltage, with a maximum difference of less than 50mV, then balancing will not run.
This scheme does not apply to modes "LIMITED" and "OFF"

Question: *During the discharge and charge test, the Internal Resistance is always zero mOhm. There are some parameters to be set in order to enable/disable this calculation?*

Answer: please set the Parameter P34, if you do not have this option enabled, it is necessary to upgrade the software of your Control Unit.

Question: *The Capacity shown in the monitor is calculate by the lowest cell voltage, the medium or other method?*

Answer: Other method. BMS monitor the exact state of the energy that is supplied to the battery, and consequently the energy that is issued. For this mode it is necessary to have a properly installed current probe.

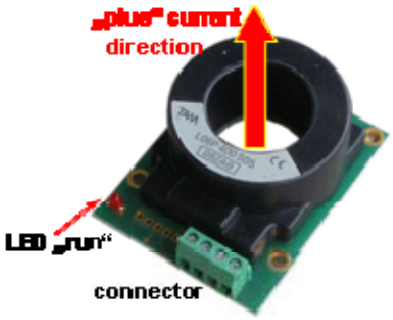

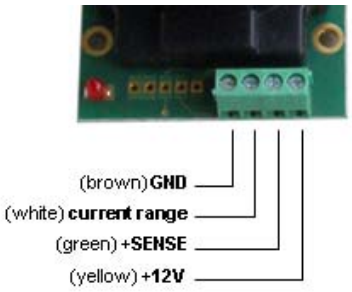

Question: *During the charge/balancing process the red led was powered. What is the meaning of the red led and green led?*

Answer: Red LED - reprograming of CBU state or overheating
Green LED - communication OK

---

http://www.ev-power.eu

EV-Power.eu managed by **i4wifi a.s.** (member of GWL/Power group)
Prumyslova 11, CZ-10219 Prague 10, CZECH REPUBLIC (EU)
phone: +420 277 007 500, fax: +420 277 007 529, email: export@i4wifi.cz